SRS Warning Light Remains ON

DESCRIPTION

The SRS warning light is located on the combination meter assembly.
When the SRS is normal, the SRS warning light comes on for approximately 6 seconds after the ignition switch is turned from the LOCK to the ON position, and then goes off automatically.
If there is a malfunction in the SRS, the SRS warning light comes on to inform the driver of a problem.
When terminals TC and CG of the DLC3 are connected, the DTC is displayed by blinking of the SRS warning light.
The SRS is equipped with a voltage-increase circuit (DC-DC converter) in the center airbag sensor assembly in case the source voltage drops.
When the battery voltage drops, the voltage-increase circuit (DC-DC converter) functions to increase the voltage of the SRS to normal voltage.
A malfunction in this circuit is not recorded in the center airbag sensor assembly. The SRS warning light automatically goes off when the source voltage returns to normal.

cardiagn.com

WIRING DIAGRAM

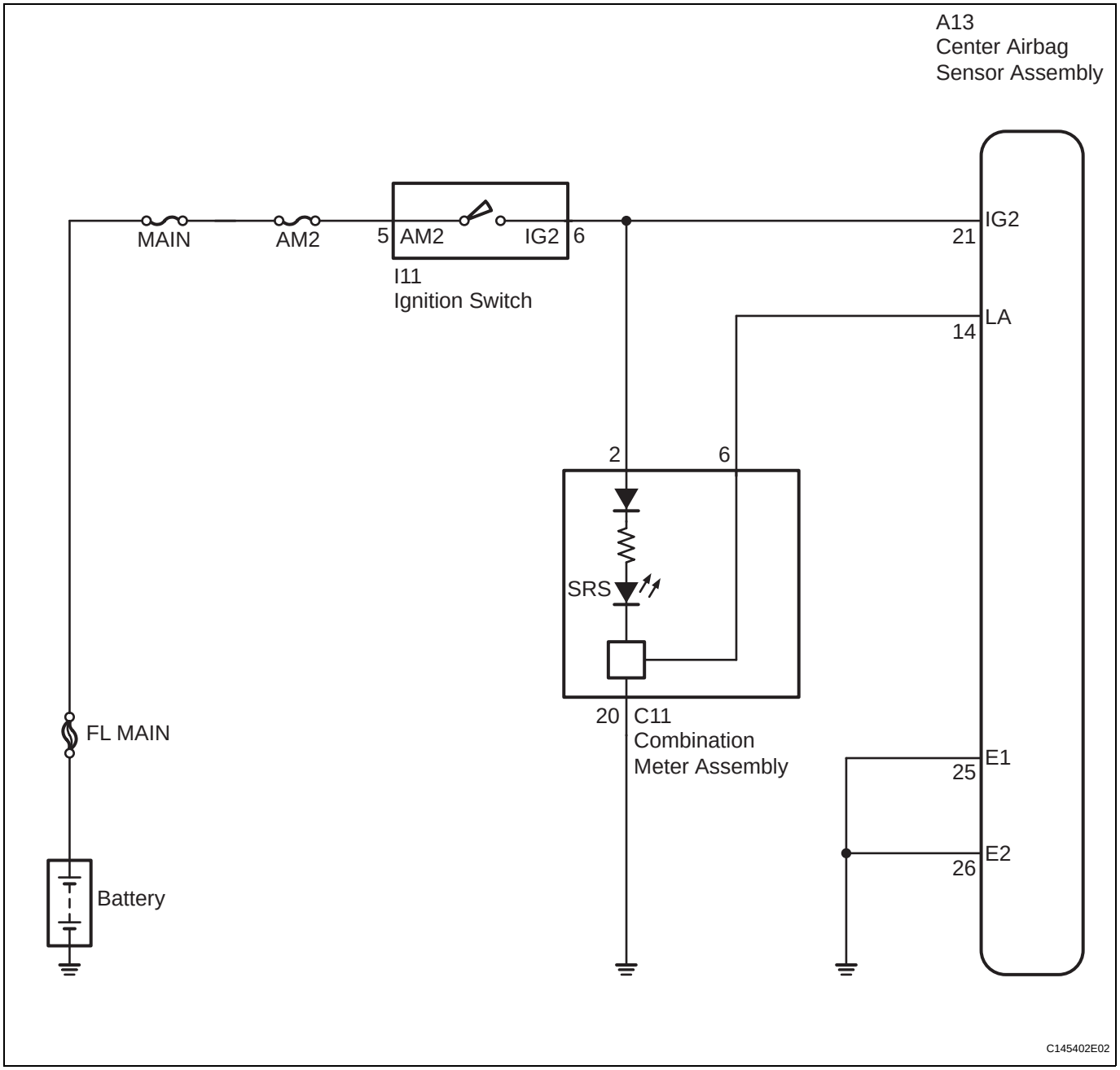

INSPECTION PROCEDURE

1	CHECK BATTERY

(a) Measure the voltage of the battery.
Standard voltage:
11 to 14 V

NG → **CHECK AND REPLACE BATTERY OR CHARGING SYSTEM**

OK

cardiagn.com

RS

2	CHECK CONNECTION OF CONNECTORS

(a) Turn the ignition switch to the LOCK position.
(b) Disconnect the negative (-) terminal cable from the battery, and wait for at least 90 seconds.
(c) Check that the connectors are properly connected to the center airbag sensor assembly and combination meter assembly.
OK:
The connectors are properly connected.

NG → **CONNECT CONNECTORS**

OK

3	CHECK WIRE HARNESS (CENTER AIRBAG SENSOR ASSEMBLY - BODY GROUND)

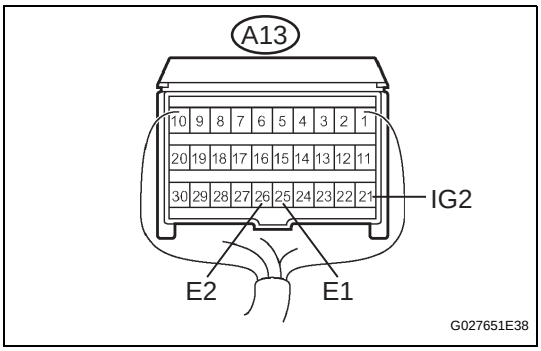

(a) Disconnect the connectors from the center airbag sensor assembly.
(b) Connect the negative (-) terminal cable to the battery, and wait for at least 2 seconds.
(c) Turn the ignition switch to the ON position.
(d) Operate all components of the electrical system (defogger, wipers, headlight, heater blower, etc.).
(e) Measure the voltage according to the value(s) in the table below.
Standard voltage

Tester connection	Condition	Specified condition
A13-21 (IG2) - Body ground	Ignition switch ON	10 to 14 V

(f) Turn the ignition switch to the LOCK position.
(g) Measure the resistance according to the value(s) in the table below.
Standard resistance

Tester connection	Condition	Specified condition
A13-25 (E1) - Body ground	Always	Below 1 Ω
A13-26 (E2) - Body ground	Always	Below 1 Ω

NG → **REPAIR OR REPLACE WIRE HARNESS**

OK

cardiagn.com

RS

4 CHECK WIRE HARNESS (CENTER AIRBAG SENSOR ASSEMBLY - COMBINATION METER ASSEMBLY)

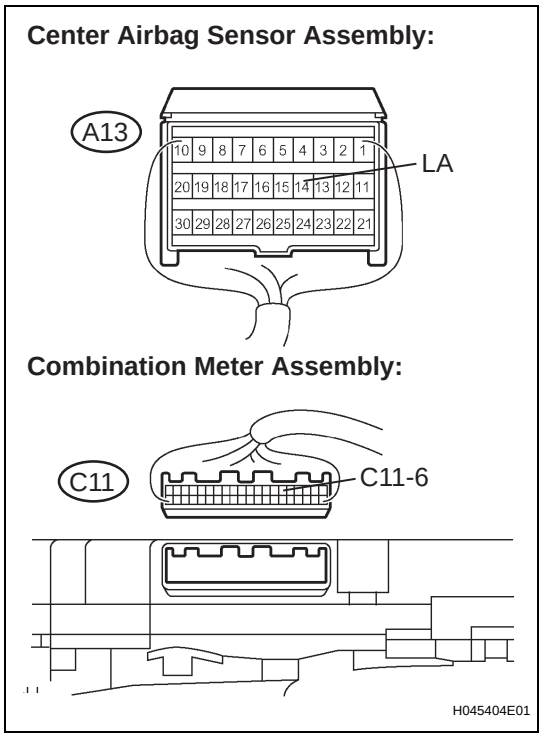

(a) Disconnect the negative (-) terminal cable from the battery, and wait for at least 90 seconds.
(b) Disconnect the connector from the combination meter assembly.
(c) Connect the negative (-) terminal cable to the battery, and wait for at least 2 seconds.
(d) Turn the ignition switch to the ON position.
(e) Measure the voltage according to the value(s) in the table below.

Standard voltage

Tester connection	Condition	Specified condition
A13-14 (LA) - Body ground	Ignition switch ON	10 to 14 V

(f) Turn the ignition switch to the LOCK position.
(g) Measure the resistance according to the value(s) in the table below.

Standard resistance

Tester connection	Condition	Specified condition
A13-14 (LA) - C11-6	Always	Below 1 Ω
A13-14 (LA) - Body ground	Always	1 MΩ or higher

NG → **REPAIR OR REPLACE WIRE HARNESS**

OK

5 CHECK COMBINATION METER ASSEMBLY

(a) Turn the ignition switch to the LOCK position.
(b) Disconnect the negative (-) terminal cable from the battery, and wait for at least 90 seconds.
(c) Connect the connector to the combination meter assembly.
(d) Connect the negative (-) terminal cable to the battery, and wait for at least 2 seconds.
(e) Turn the ignition switch to the ON position.
(f) Measure the voltage according to the value(s) in the table below.

Standard voltage

Tester connection	Condition	Specified condition
C11-6 - Body ground	Ignition switch ON	8 to 14 V

NG → **GO TO METER / GAUGE SYSTEM**

OK

REPLACE CENTER AIRBAG SENSOR ASSEMBLY

cardiagn.com